2-input logic switch.

The first thought might be , what is special about this. Read ahead to understand the requirement and solution.

System :
1 commercial grid + 1 domestic grid.
Off grid solar system with a separate MPPT.
MPPT connected to commercial grid.
UPS output connected to both loads (domestic as well as commercial)

Problem :
Since the MPPT is connected to the Commercial Grid, when solar production is very low, MPPT switches on the grid , this in turn switches UPS to Grid which is connected to commercial Grid. Since the output of UPS is connected to both the Loads , the domestic load shall run on commercial grid. Connecting loads interchanging the grid is illegal.

So when Solar production is High, MPPT Grid is OFF and UPS works on Battery. When Solar production is low, MPPT grid is High and so Output of UPS is on Grid.

Back at the domestic mains switch panel, We need to know whether the Output of UPS is from pure battery or from Grid(other line) and switch the domestic load either to the UPS or to the domestic grid.

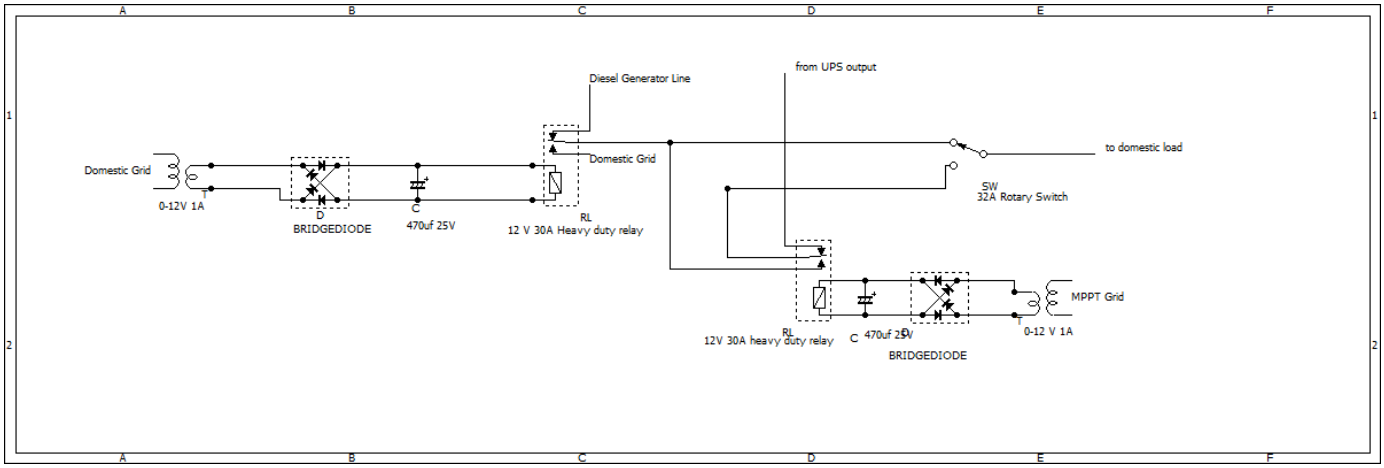


The above is a basic switching method used. This works fine.

The first relay switches the output between Diesel generator or the grid. The second relay switches the output between Ups and domestic grid. The Manual Switch could be used to change the connected load to either UPS line or domestic grid manually in the case something fails like dead ups etc. Though this works nicely under normal conditions, it does have some draw back. The second relay is charged by the power supply connected to the MPPT Grid, which is connected to the commercial line. So when solar production is Nill (evening to next morning), MPPT switches on the grid line and ups output gets connected to the MPPT grid. So the domestic load works on commercial grid. Since the MPPT grid is live, the second relay gets charged and output switches to domestic grid disconnecting from UPS line. The main concern was this second transformer works on Commercial Grid which is illegal. This was the reason for designing the circuit.

Solution:
Logical Table required:

| MPPT | SOLAR | OUTPUT |
|---|---|---|
| L | H | H |

| | | |
|---|---|---|
| **L** | **L** | **L** |
| **H** | **L** | **L** |
| **H** | **H** | **L** |

From the above table we can see that the second relay should switch on ONLY when MPPT Grid is OFF and UPS is ON. At all other times, the relay should not be actuated, which shall connect the load to domestic grid. The load shall be connected only when UPS output is present while MPPT grid is OFF (connected to commercial grid). The second transformer and its step down power supply connected to the relay is connected to the UPS supply. If the power supply is connected to UPS output directly without proper logical switching circuit, it shall work on the Commercial grid when ups switches to direct mode.

Logic table of gates

| NAND | | | AND | | | OR | | | NOR | | | XOR | | | XNOR | | |
|---|---|---|---|---|---|---|---|---|---|---|---|---|---|---|---|---|---|
| A | B | X | A | B | X | A | B | X | A | B | X | A | B | X | A | B | X |
| H | H | L | H | H | H | H | H | H | H | H | L | H | H | L | H | H | H |
| H | L | H | H | L | L | H | L | H | H | L | L | H | L | H | H | L | L |
| L | L | H | L | L | L | L | L | L | L | L | H | L | L | L | L | L | H |
| L | H | H | L | H | L | L | H | H | L | H | L | L | H | H | L | H | L |

We can see that we cannot achieve what we require using only one type of gate. We require a combination of gates.

The Gate logic applied

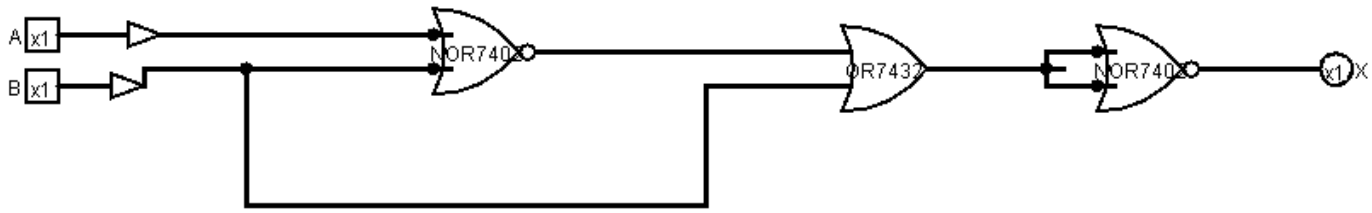


We can achieve what we want by using two gates. If we study the Logic pattern of Gates, we can see that we require the High portion of NOR Gate and Low portion of OR Gate.

| GATE | A | B | X |
|---|---|---|---|
| OR | **L** | **H** | **H** |
| | **L** | **L** | **L** |
| NOR | **H** | **L** | **L** |
| | **H** | **H** | **L** |

Actual circuit used.

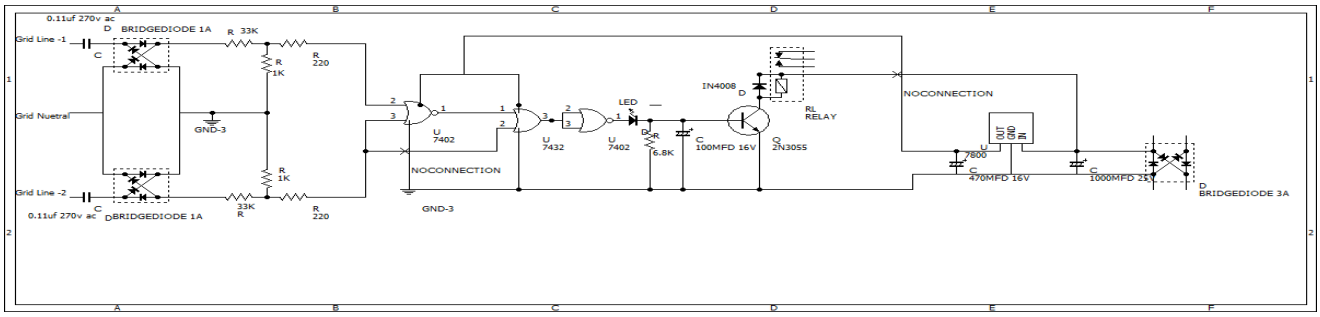

The circuit is pretty simple and requires little explanation. The input voltage of Logic gates should not exceed the supply voltage (5V).
3A Bridge rectifier is connected to a 0-12V step down transformer. The output is smoothed using a 1000Mfd / 25V capacitor. This voltage is used to drive the load switching relay through the NPN power transistor 2n3055.

The logic gate IC's are fed with a 5v supply using a 7805 regulator ic.

The 0.11uf 270v , bridge rectifier and voltage resistances used 33K+1K voltage divider resisters and 220ohm buffer resistance , in combination reduces the voltage at the gate input to 4V.

When the base of 2N3055 is high, the collector and emitter gets shorted and circuit of relay gets completed, actuating it. The LED used performs as a limiter as well as visual indicator. The 100mfd capacitor functions as a stabiliser for the base voltage, without which the relay tends to chatter.

Using NOR & OR gate like

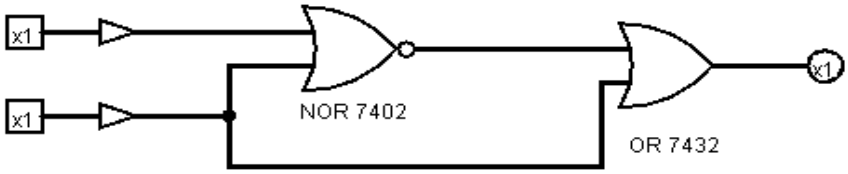


We get Logical Output as

| NOR + OR | | |
|---|---|---|
| **A** | **B** | **X** |
| H | H | H |
| H | L | L |
| L | L | H |
| L | H | H |

The output should be actually reverse of the above. Hence one more gate was added to reverse the output

| NOR + OR + NOR | | |
|---|---|---|
| **A** | **B** | **X** |
| H | H | L |
| H | L | H |
| L | L | L |
| L | H | L |

Hope the explanation is sufficiently clear.

The requirement is very special and uncommon. However one can use these logic gates, in combination, if required, under various situations. It can also be used to get desired output with even more logical inputs.

Parts required
0.11uf 270v capacitor * 2
1A Bridge rectifier *2
3A Bridge rectifier *1
33K ½ w resistance *2
1K ½ W resistance *2
220 Ohm resistance *1
6.8K resistance *1

IC 7402 *2
IC 7432 *1
IC7805 *1
100mfd 16V *1
470mfd 16V *1
1000mfd 25V *1
Led *1
Rectifier diode 1A *1
0-12 V step down transformer *1

A.G.Suresh Babu.